C.I.P.	22 PPC-USA Country of Origin: FI	TAB.	I
		Date	89-04-18
		Revision	02-05-15

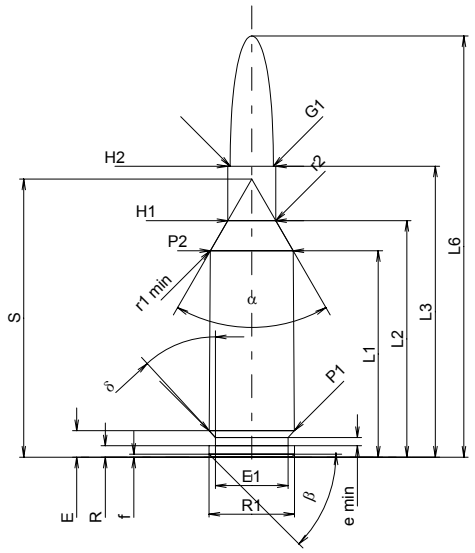

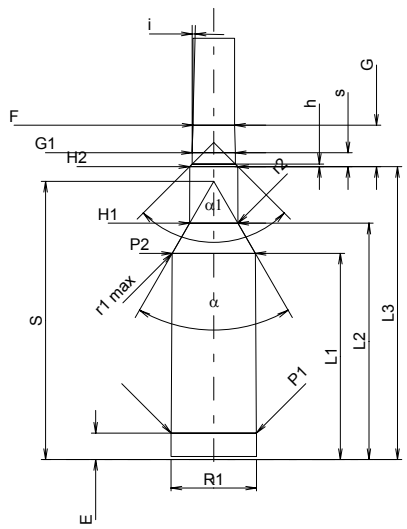

Scale 1:1

CARTRIDGE MAXI

Lengths

L1 1)*	=	27.30	-0.20
L2 1)*	=	31.28	-0.20
L3 1)	=	38.48	
L4	=		
L5	=		
L6	=	55.70	

Case Head

R	=	1.50
R1	=	11.30
R3	=	
E	=	3.50
E1	=	9.60
e min	=	1.10
δ	=	42°40'48"
f	=	0.40
β	=	45°

Powder Chamber

P1	=	11.26	
P2 1)*	=	10.95	-0.20

Junction Cone

α	=	60°02'47"
S	=	36.77
r1 min	=	1.00
r2	=	3.00

Collar

H1 *	=	6.35
H2 1)	=	6.35

Projectile

G1 1)	=	5.70
G2	=	
F	=	
L3+G 1)	=	43.96

Pressures (Energies)
Method Transducer

Pmax	=	4050	bar
PK	=	4658	bar
PE	=	5060	bar
M	=	17.50	
EE	=	1935	Joule

Miscellaneous Dimensions

Fe 1)	=	0.10
delta L	=	

CHAMBER MINI

Lengths

L1 *	=	27.27
L2 *	=	31.25
L3 1)	=	38.74

Breech

R	=	1.50
R1	=	11.32
R2	=	
R3	=	
r	=	

Powder Chamber

E	=	3.50
P1 1)	=	11.28
P2 *	=	10.98

Junction Cone

α 1)	=	59°56'16"
S	=	36.79
r1 max	=	0.50
r2	=	3.00

Collar

H1 *	=	6.39
H2 1)	=	6.38

Commencement of Rifling

G1 1)*	=	5.72
G 1)*	=	5.48
α1	=	90°
h	=	0.33
s *	=	1.85
i 1)	=	1°30'
w	=	

Barrel

F 1)*	=	5.53
Z 1)	=	5.66

Grooves

b	=	2.04	
N	=	6	
u	=	355.00	
Q	=	24.83	mm²

Dimensions in << mm >>
Dimensions and Tolerances for Proof Barrels
see Appendix CR 1.

Notes: 1) Check for safety reasons
* Basic dimensions